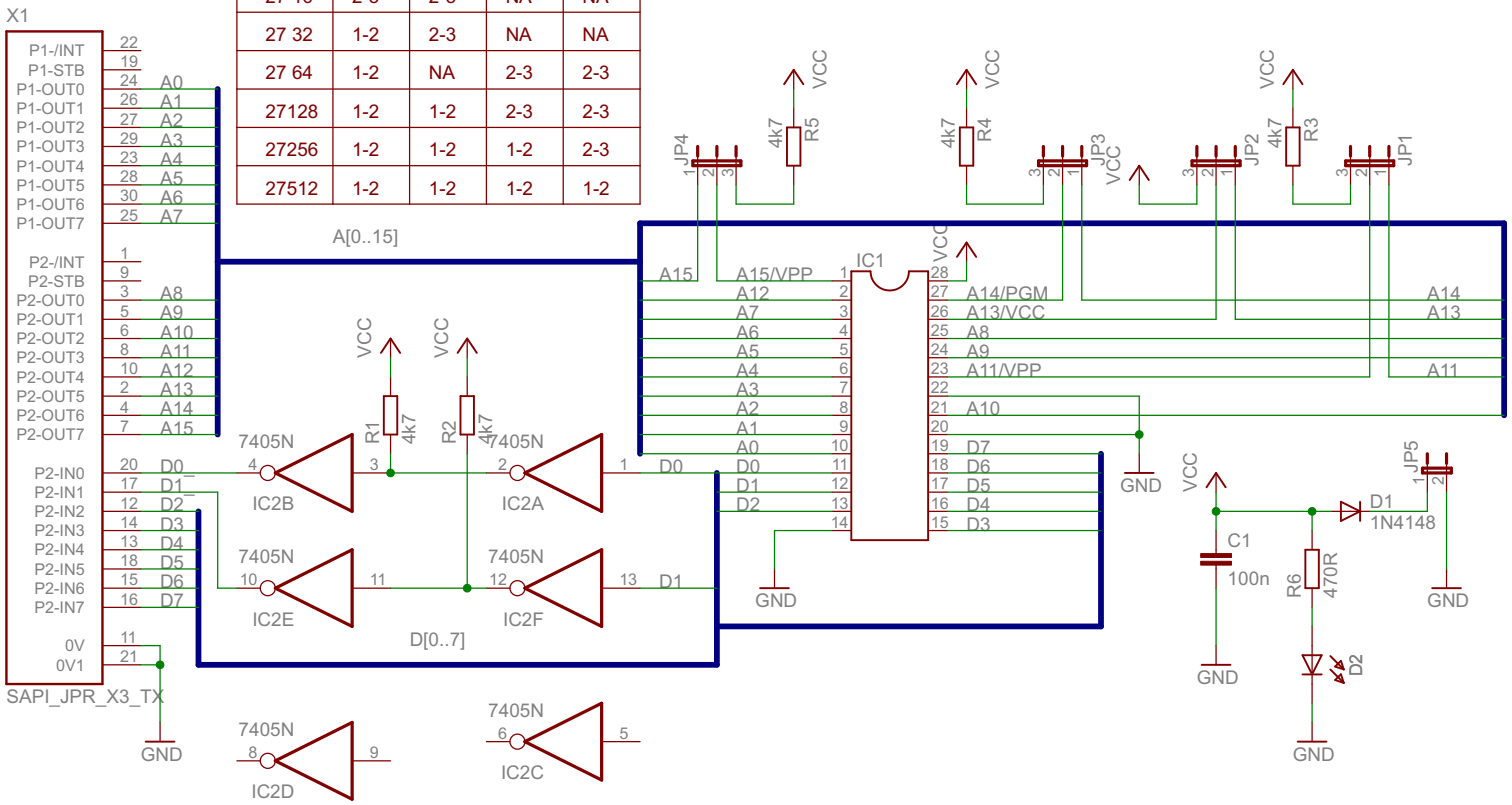	JP1	JP2	JP3	JP4
27 16	2-3	2-3	NA	NA
27 32	1-2	2-3	NA	NA
27 64	1-2	NA	2-3	2-3
27128	1-2	1-2	2-3	2-3
27256	1-2	1-2	1-2	2-3
27512	1-2	1-2	1-2	1-2